Sonerai Elevator Push Rod Bearing

Sonerai Elevator Push Rod Bearing

David Wilcox

September 12, 2008

The elevator push rod, rod end bearing has worried me for years. The spherical rod end is inserted into the parallel bars at the end of the control torque tube assembly. On my installation, and I assume others, there is insufficient rotational freedom provided by the spherical bearing to allow full travel of the ailerons. The Sonerai plans direct to use a REB-3N2 rod end bearing, which is a Fafnir part number.

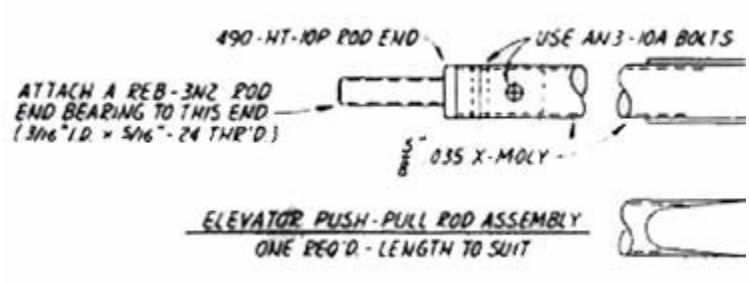

This bearing only allows approximately 20 degrees of freedom. The Sonerai stick needs about 60 degrees of travel. The impression given in the plans is that bearing alone is going to provide the rotational freedom.

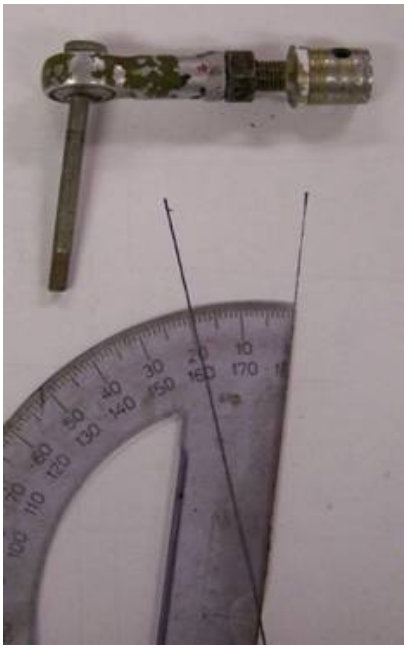

If the check nut on the 5/16 male threaded end stud (AN490-10) is tightened against the bearing body as it should be in a normal installation, the bearing will limit the travel of the stick. In order to obtain full lateral stick travel and full aileron movement, the check nut must be loosened or removed to allow the bearing body to rotate on the male threads of the AN490-10 stud. This has worked in my Sonerai for more than 1500 hours. There does not seem to be any extensive wear. So this is not necessarily a serious problem, but I simply don't like using threads as a bearing in a primary control system.

This year I had my son Tony, who is also now flying the Sonerai, help me with the annual condition inspection. He found the discrepancy and reported it to me. With embarrassment, I admitted that I knew about it. I've always meant to do something about it, but never have until now.

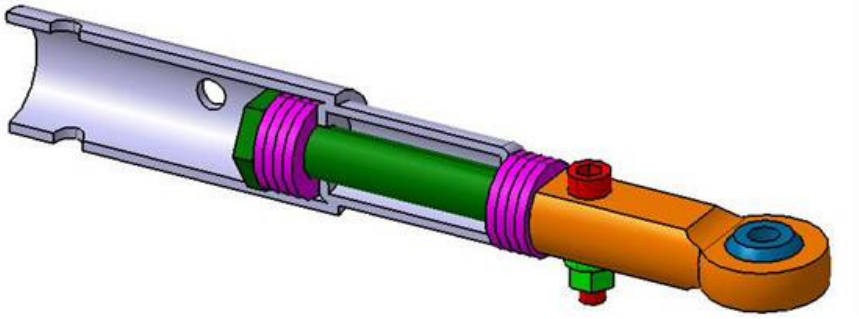

What I have done is remove the threaded stud AN490-10 from the end of the elevator push rod. Then I replaced it with a bearing swivel assembly. This design uses the same spherical bearing body, but the 5/16 male thread that connected it to the push rod is now an AN5 bolt that is free to turn within an axial captive spindle. Something more positive than a check nut is needed to antirotate the bolt relative to the bearing body. (The previous design could not unscrew, but this one could.) The bearing body and bolt are matched drilled for a number 8 screw using the bearing body witness hole and the bolt cotter pin hole as guides. The assembly is lightly greased and bolted to the end of the push rod. Several washers are included at each end of the spindle to shim the bolt swivel clearance and adjust the length (which is something I thought of after fabricating mine of course). I have about three flight hours on the assembly as of this writing.

If you have comments on this or other articles, please post them to the Sonerai.net Forum